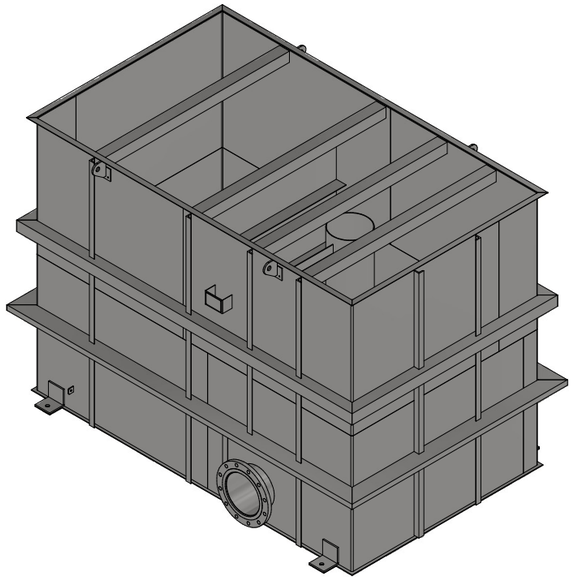

ISO VIEW (FROM FRONT)
SCALE 1:45

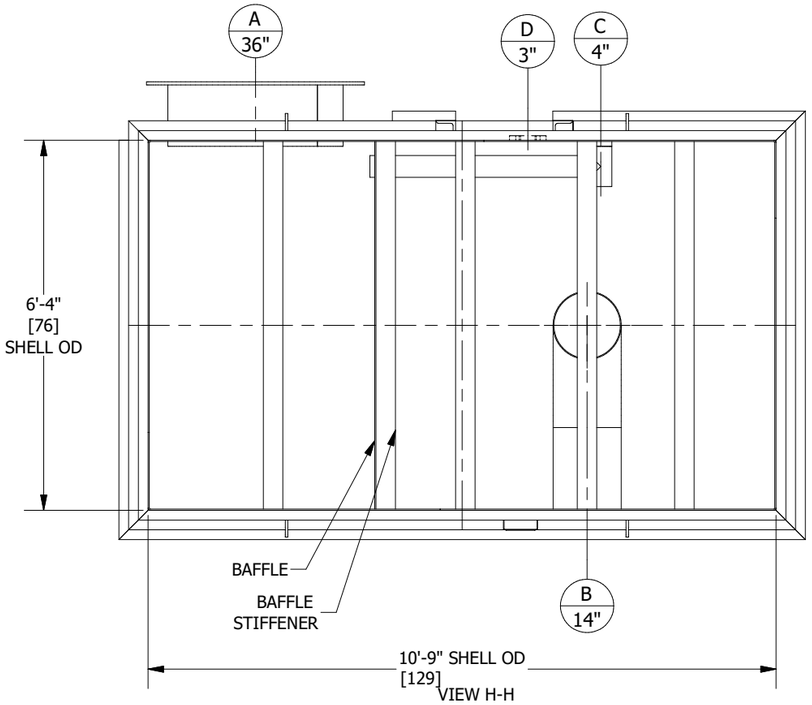

VIEW H-H
SCALE 3/8" = 1' 0"

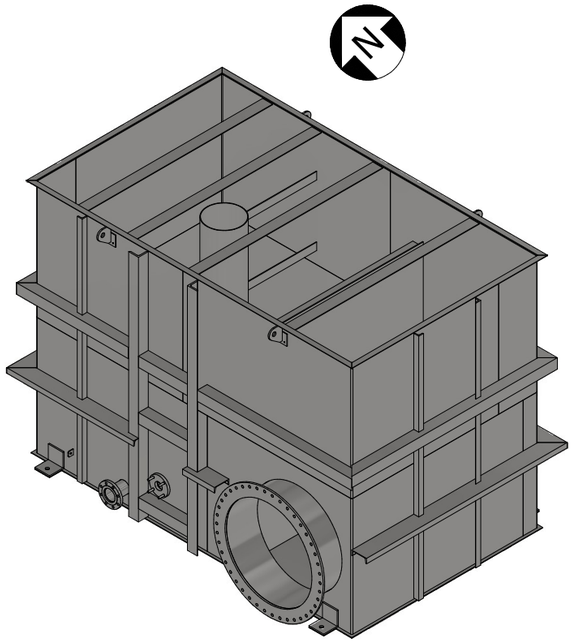

ISO VIEW (FROM REAR)
SCALE 1:45

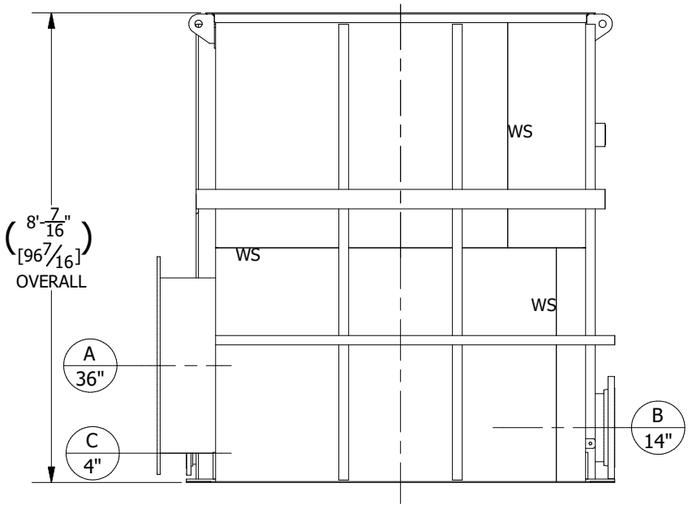

VIEW G-G
SCALE 3/8" = 1' 0"

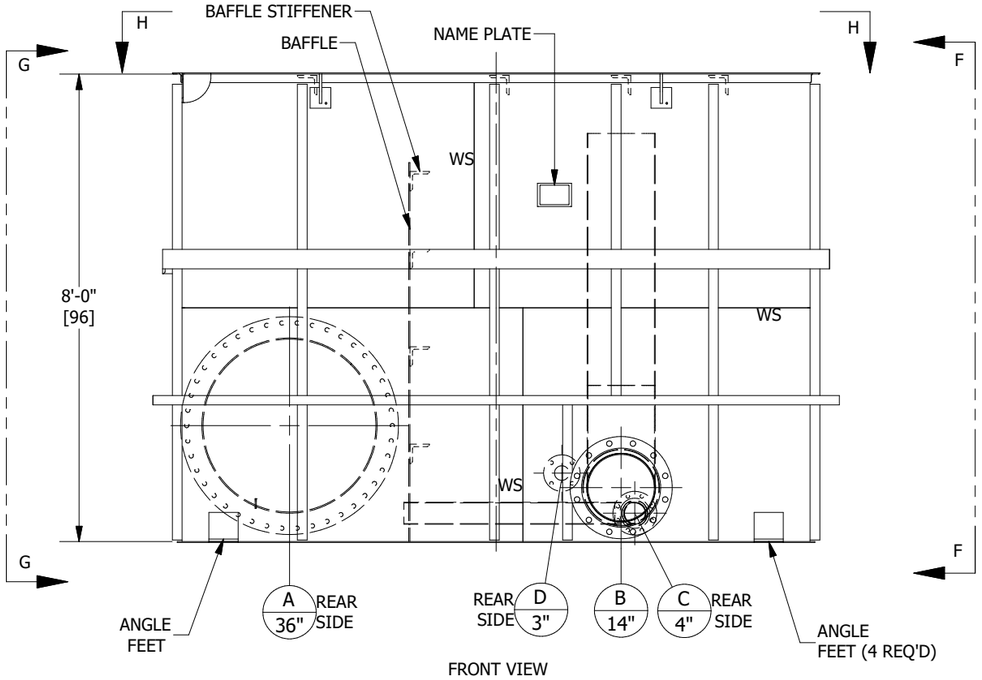

FRONT VIEW
SCALE 3/8" = 1' 0"

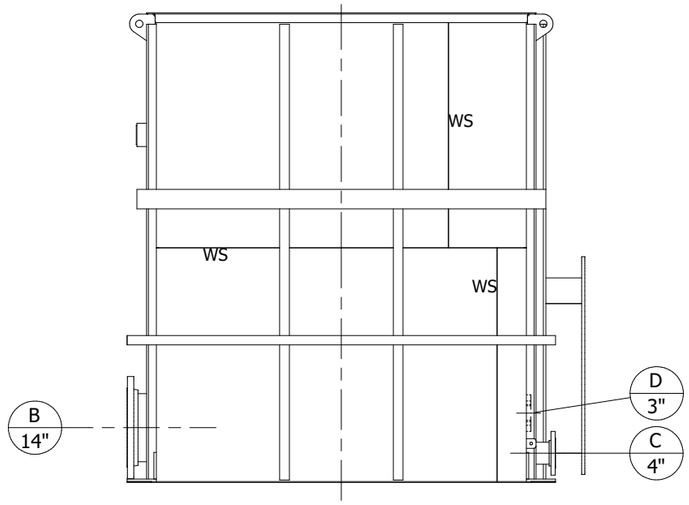

VIEW F-F
SCALE 3/8" = 1' 0"

REV	D.BY	C.BY	DATE	DESCRIPTION
2	SS	AD	03-31-26	CERTIFIED
1	SS	AD	02-23-26	APPROVAL REV 1
0	SS	AD	01-23-26	APPROVAL

REVISIONS

Savannah Tank & Equipment Corp.
1517 Telfair Road, Savannah, GA 31415
(912) 233-8902

DRAWN BY: SS
CHK'D BY: AD
APPROVED BY: HP
SCALE: 3/8" = 1' 0"

Sylvamo
Rectangular Seal Tank
EQUIP. 472-5-3584-00A
CUST. PO #S0769C8106

DRAWING NO.: 358-25-1 SHT 1 OF 5 REV. SET 2

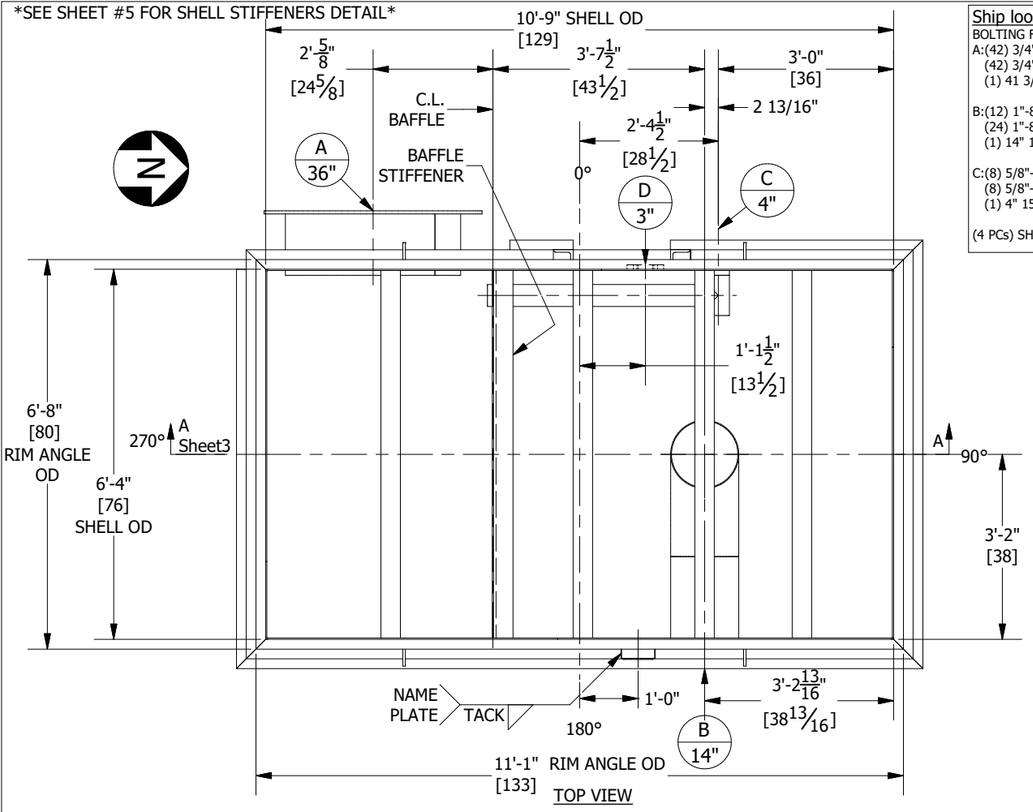

Ship loose items:

BOLTING FOR FLANGE CONNECTIONS:
A:(42) 3/4"-10 NC × 2 1/2" HH BOLT (ZINC PLATED)
(42) 3/4"-10 NC HH NUT (ZINC PLATED)
(1) 41 3/8" OD x 36" ID x 1/8" GASKET (GARLOCK 3000)

B:(12) 1"-8 NC × 6" FULL THREADED STUDS (ZINC PLATED)
(24) 1"-8 NC HH NUT (ZINC PLATED)
(1) 14" 150# RING GASKET × 1/8" THK (GARLOCK 3000)

C:(8) 5/8"-11 NC × 3" HH BOLT (ZINC PLATED)
(8) 5/8"-11 NC HH NUT (ZINC PLATED)
(1) 4" 150# RING GASKET × 1/8" THK (GARLOCK 3000)

(4 PCs) SHIM PLATES

NOZZLE SCHEDULE

MARK	SERVICE	SIZE	RATING	TYPE/STYLE	NECK SCHED.	PROJ. EXT. (C.L.)	PROJ. INT. (MIN.)	WELD FIGURE	REPAD SIZE (W X THK.)	WELD SIZE "A1"	WELD SIZE "A2"	WELD SIZE "B1"	WELD SIZE "B2"	WELD SIZE "C1"	WELD SIZE "C2"
A	OUTLET - TO STAND PIPE	36"	-	PLATE FLG	1/4"	6"	1"	7	-	-	-	3/16	3/16	-	-
B	OVERFLOW	14"	150#	RFSO	10S	6"	SEE DWG	1,7	-	1/4	1/4	1/4	1/4	-	-
C	DRAIN	4"	150#	RFSO	10S	6"	SEE DWG	1,7	-	1/4	1/4	1/4	1/4	-	-
D	LEVEL TRANSMITTER	3"	-	SCAB	10S	6"	-	-	-	-	-	-	-	-	-

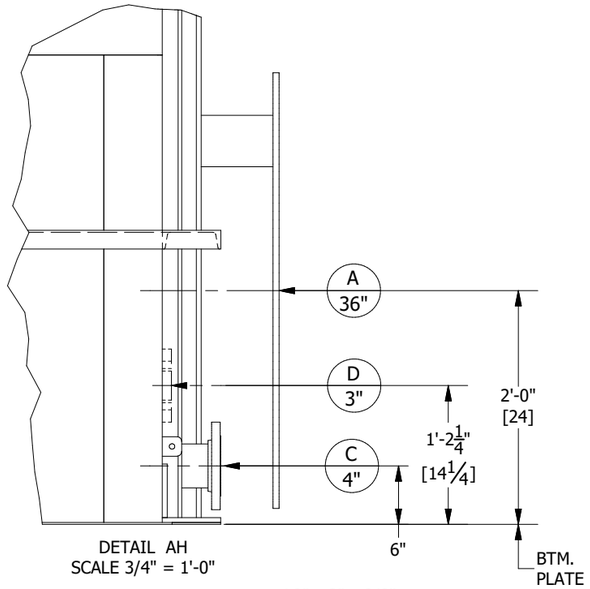

DETAIL AH
SCALE 3/4" = 1'-0"

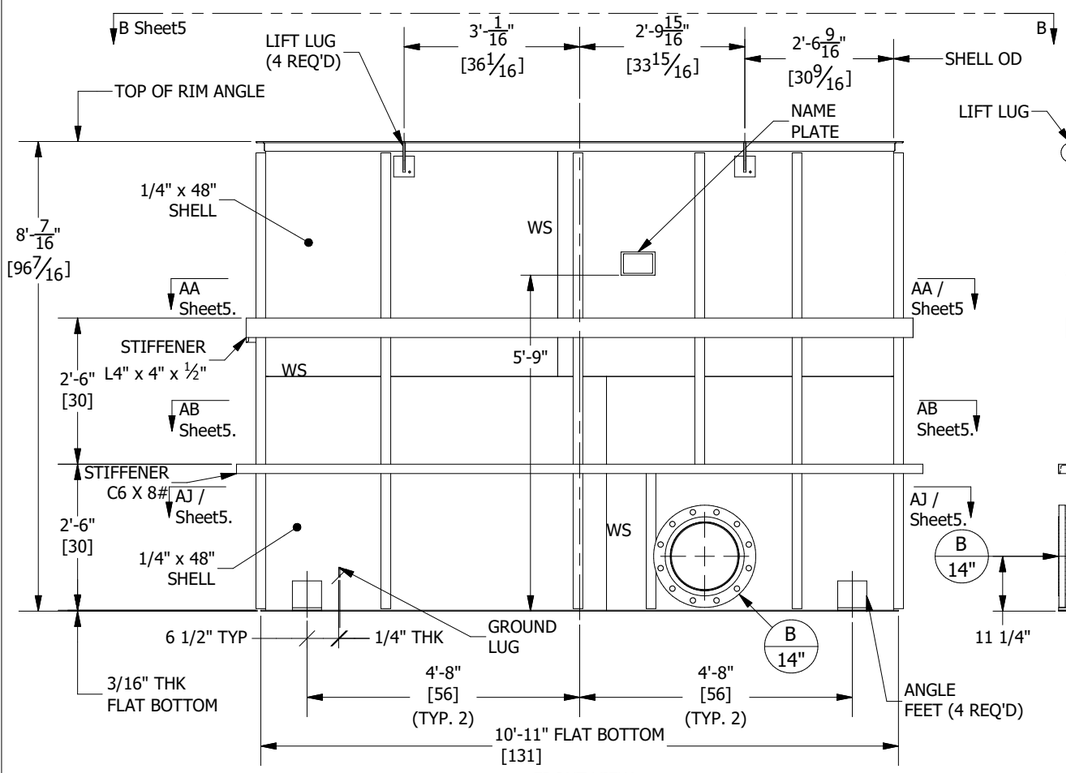

FRONT VIEW

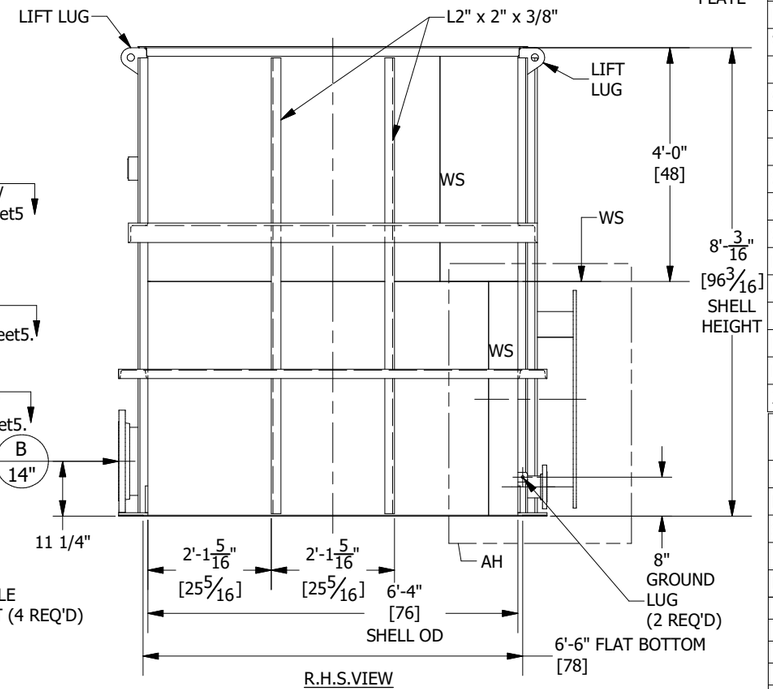

R.H.S.VIEW

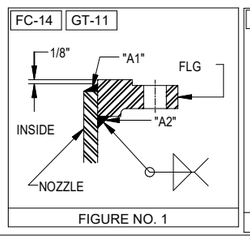

FIGURE NO. 1

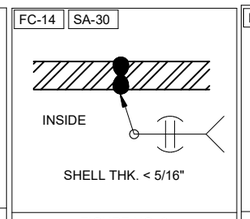

FIGURE NO. 9

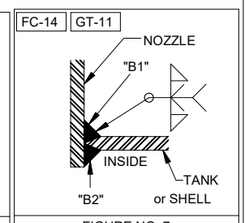

FIGURE NO. 7

MATERIALS OF CONSTRUCTION	VESSEL
SHELL	SA240-304/304L
BOTTOM	SA240-304/304L
RIM ANGLE	SA479-304/304L
NOZZLE NECKS	SA312-304/304L WLD & SA240-304/304L
NOZZLE FLANGES	SA182F-304/304L & SA240-304/304L
MANWAY NECKS	-
MANWAY FLANGES	-
GASKETS	GARLOCK 3000
BOLTS/STUDS	SA193-B7 (ZINC PLATED)
NUTS	SA194-2H (ZINC PLATED)
REPADS	SA240-304/304L
COUPLINGS	-
SUPPORTS/HOLD DOWNS	SA240-304/304L
LIFTING LUGS	SA240-304/304L
VACUUM RINGS	-
INSULATION RINGS	-
GROUND LUG	SA240-304/304L
BAFFLE	SA240-304/304L
INTERNAL SUPPORT ANGLE	SA479-304/304L
STIFFENERS ANGLE	SA479-304/304L
STIFFENERS CHANNEL	SA479-304/304L
SCUB FLANGE	SA240-304/304L
HANDRAIL	-
HANDRAIL CLIPS	-
PLATFORM	-
PLATFORM CLIPS	-
DIPTUBE SUPPORT	-
JACKET SHELL	-

DESIGN DATA	VESSEL
DESIGN AND FAB. CODE	AISC 360-10
CERT. STAMP REQ'D.	NOT REQ'D
DESIGN PRESSURE	ATM
DESIGN TEMPERATURE	150° F
MIN. DESIGN METAL TEMP.	-20 F
OPERATING PRESSURE	ATM
OPERATING TEMPERATURE	AMBIENT
JOINT EFFICIENCY HEADS	0.70
JOINT EFFICIENCY SHELL	0.70
CORROSION ALLOWANCE	0"
SPECIFIC GRAVITY	1.00
EARTHQUAKE ZONE	Ss = (0.490) S1 = (0.130)
WIND LOAD	INDOORS
STRESS RELIEF	NOT REQ'D
RADIOGRAPHIC EXAM	NOT REQ'D
DYE PENETRANT EXAM	NOT REQ'D
MAGNETIC PARTICLE EXAM	NOT REQ'D
WATER FILL TEST	YES
PNEUMATIC TEST	NOT REQ'D
JKT HYDRO TEST	-
JKT DESIGN AND FAB. CODE	-
JKT CERT. STAMP REQ'D.	-
JKT DESIGN PRESSURE	-
JKT DESIGN TEMPERATURE	-
JKT MIN. DESIGN METAL TEMP.	-
JKT OPERATING PRESSURE	-
JKT OPERATING TEMPERATURE	-
JKT JOINT EFFICIENCY HEADS	-
JKT JOINT EFFICIENCY SHELL	-

VESSEL FINISH
INTERIOR WELD TREATMENT: SAV TANK STANDARD
EXTERIOR WELD TREATMENT: SAV TANK STANDARD
SAV TANK FINISHING STANDARD: SEE NOTE 6
INSULATION: N/A
PAINTING: N/A

VESSEL CAPACITY AND WEIGHTS	
OPERATING CAPACITY	3,600 GAL.
FULL CAPACITY	4,000 GAL.
EMPTY SHIPPING WEIGHT	6,600 LBS.
WEIGHT FULL OF WATER	40,700 LBS.
WEIGHT FULL OF PRODUCT	40,700 LBS.

QUALITY CONTROL

ENG. _____ DATE: _____

Q.C. _____ DATE: _____

This drawing is issued for customer approval. please review, make approval changes (if any) in red. check the appropriate box, sign & date.

- ☐ Approval – no changes. Please proceed with fabrication.
- ☐ Approved as noted. Please proceed with fabrication
- ☐ Not approved. Please make changes and resubmit.

Customer signature _____ Date _____

GENERAL NOTES

1.) COVER ALL FLANGES, OPENINGS & MACHINED SURFACES PRIOR TO SHIPMENT UNLESS OTHERWISE NOTED.

2.) BOLT HOLES TO STRADDLE 0° & 180° UNLESS OTHERWISE NOTED.

3.) NOZZLE REPADS TO HAVE (1) Ø1/4" TELL-TALE HOLES ON HORIZONTAL CENTER LINE. ALL OTHER REPADS TO HAVE (1) Ø1/4" WEEP HOLE AT LOWEST POINT ON PAD.

4.) MANUFACTURING TOLERANCE TO BE IN ACCORDANCE WITH API STANDARD 650 7.5.

5.) ASME MATERIALS TO CONFORM TO THE FOLLOWING:
FLANGES - B16.5
FITTINGS - B16.9 & COUPLINGS - B16.11.

6.) PICKLE ALL EXTERIOR WELDS. PASSIVATE INTERIOR & EXTERIOR OF VESSEL.

REV	D.BY	C.BY	DATE	DESCRIPTION
2	SS	AD	03-31-26	CERTIFIED
1	SS	AD	02-23-26	APPROVAL REV 1
0	SS	AD	01-23-26	APPROVAL

REVISIONS

Savannah Tank & Equipment Corp.
1517 Telfair Road, Savannah, GA 31415
(912) 233-8902

DRAWN BY: SS
CHK'D BY: AD
APPROVED BY: HP
SCALE: 3/8" = 1' 0"

Sylvamo
Rectangular Seal Tank
EQUIP. 472-5-3584-00A
CUST. PO #S0769C8106

DRAWING NO.: 358-25-2 SHT 2 OF 5 REV. SET 2

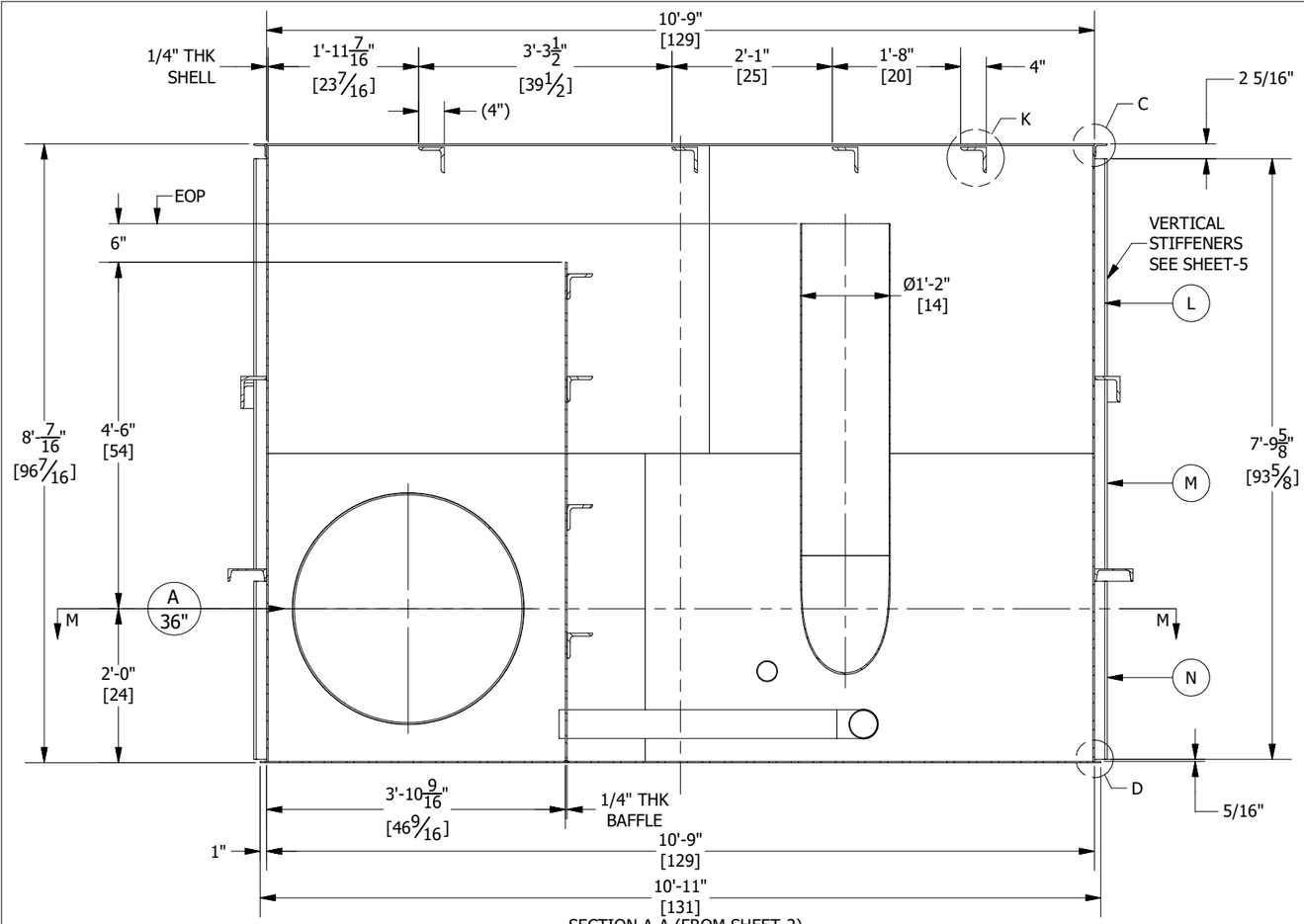

SECTION A-A (FROM SHEET-2)
SCALE 1/2" = 1' 0"

EOP=END OF PIPE

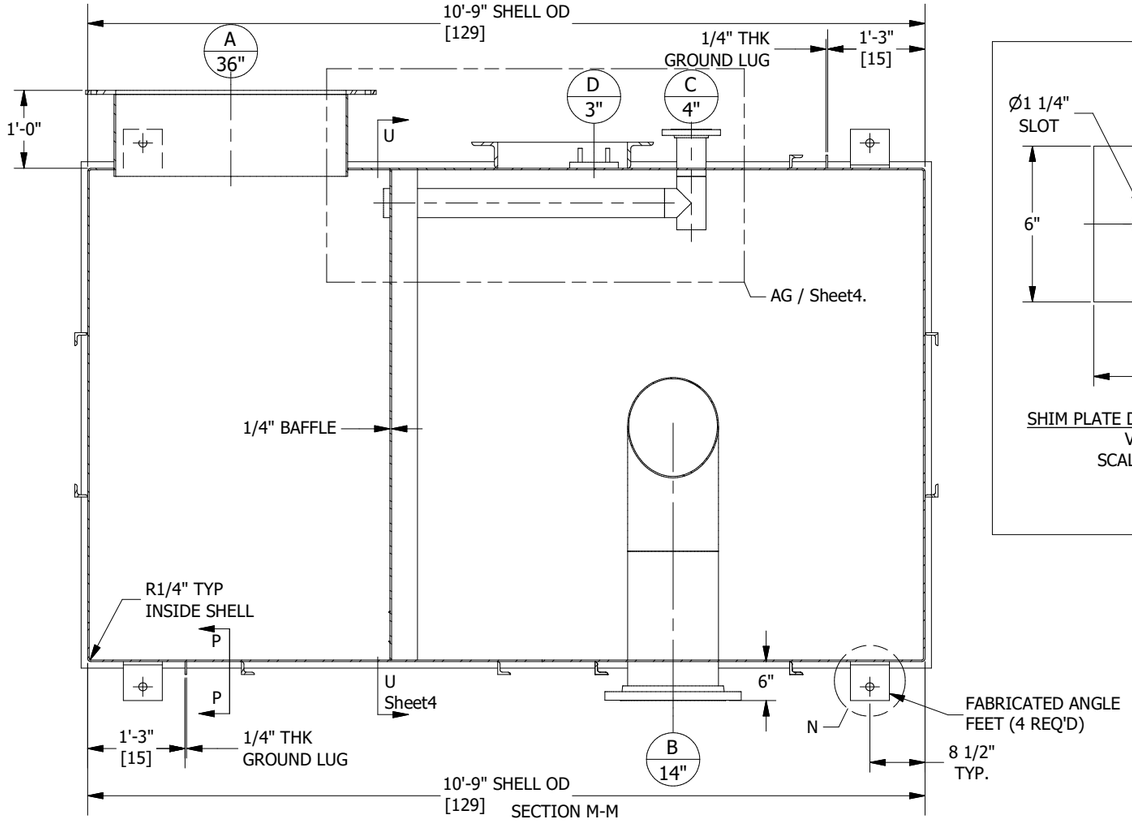

SECTION M-M
SCALE 1/2" = 1' 0"

FC-14

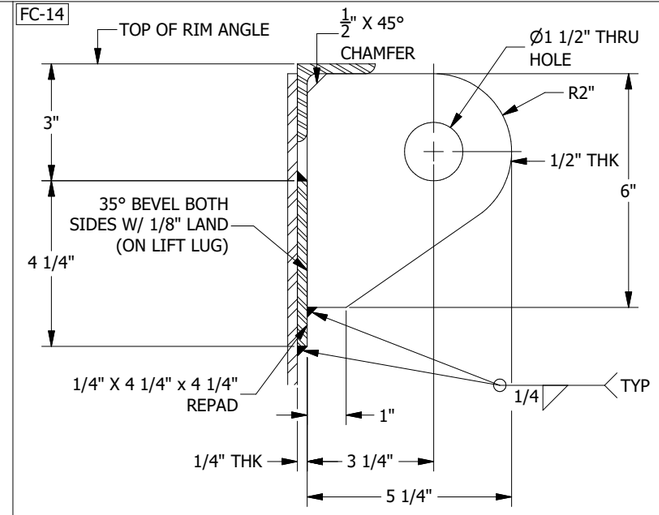

ANGLE LIFT LUG DETAIL (4 REQ'D)
TANK WT. </= 10000#
SHACKLE PIN DIA. = 1"
SECTION L-L
SCALE 3" = 1' 0"

FC-14

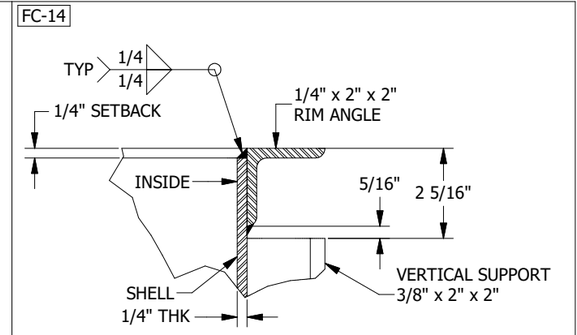

RIM ANGLE DETAIL
DETAIL C
SCALE 3" = 1'-0"

FC-14

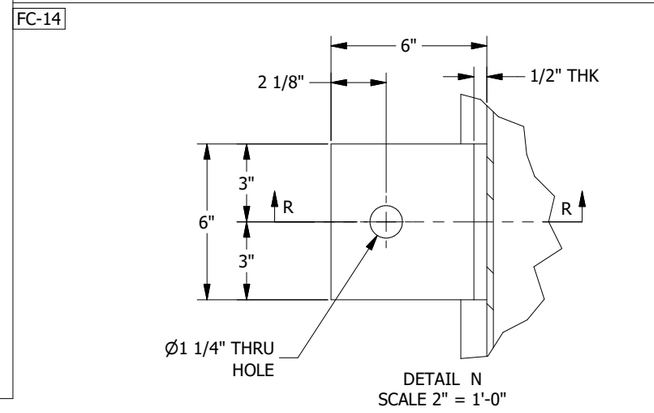

DETAIL N
SCALE 2" = 1'-0"

FC-14

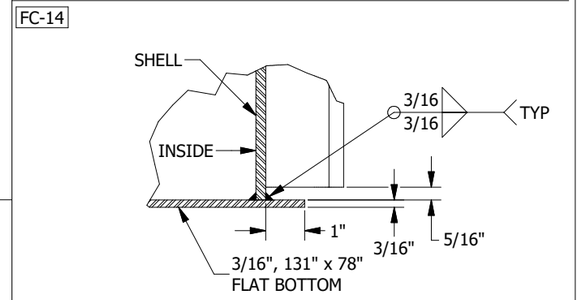

FLAT BOTTOM DETAIL
DETAIL D
SCALE 3" = 1'-0"

FC-14

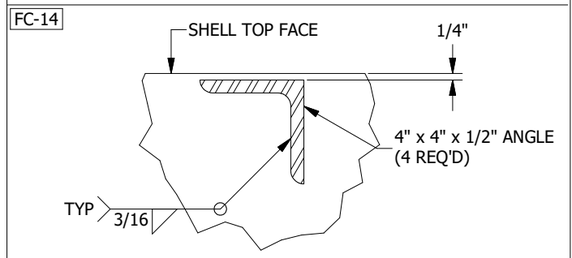

SHELL INTERNAL STIFFENERS DETAIL
DETAIL K
SCALE 2" = 1'-0"

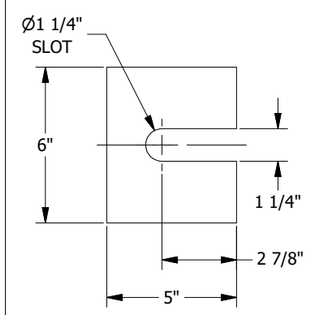

SHIM PLATE DETAIL (SHIP LOOSE)
VIEW T-T
SCALE 2" = 1'-0"

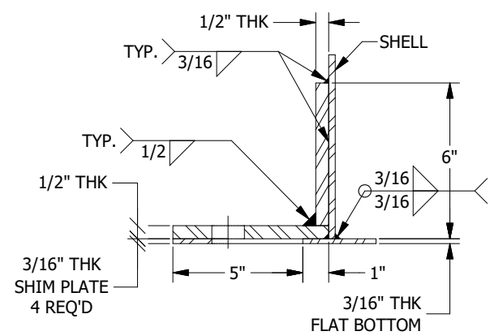

FABRICATED ANGLE FEET DETAIL (4 REQ'D)
SECTION R-R
SCALE 2" = 1'-0"

FC-14

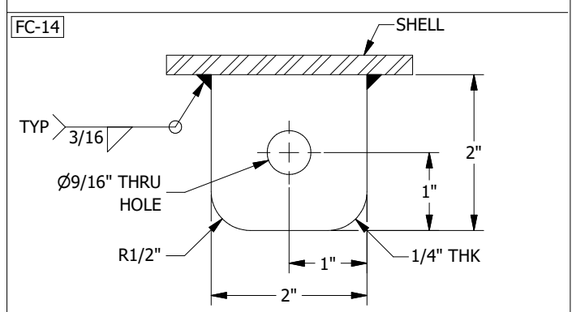

GROUND LUG DETAIL (2 REQ'D)
SECTION P-P
SCALE 6" = 1' 0"

REV	D.BY	C.BY	DATE	DESCRIPTION
2	SS	AD	03-31-26	CERTIFIED
1	SS	AD	02-23-26	APPROVAL REV 1
0	SS	AD	01-23-26	APPROVAL

REVISIONS

Savannah Tank & Equipment Corp.
1517 Telfair Road, Savannah, GA 31415
(912) 233-8902

DRAWN BY: SS
CHK'D BY: AD
APPROVED BY: HP
SCALE: 3/8" = 1' 0"

Sylvamo
Rectangular Seal Tank
EQUIP. 472-5-3584-00A
CUST. PO #S0769C8106

DRAWING NO.: 358-25-3 SHT 3 OF 5 REV. SET 2

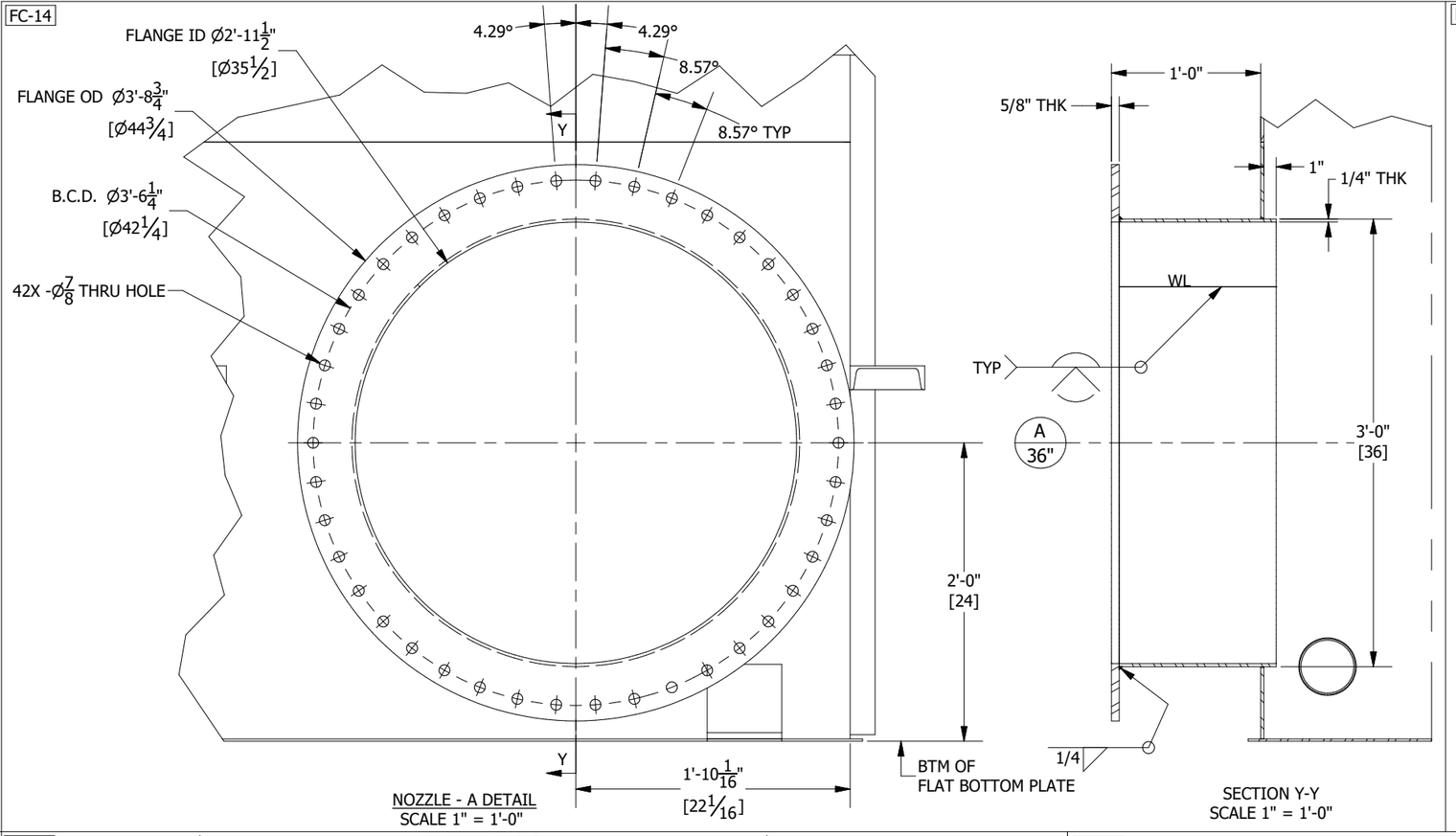

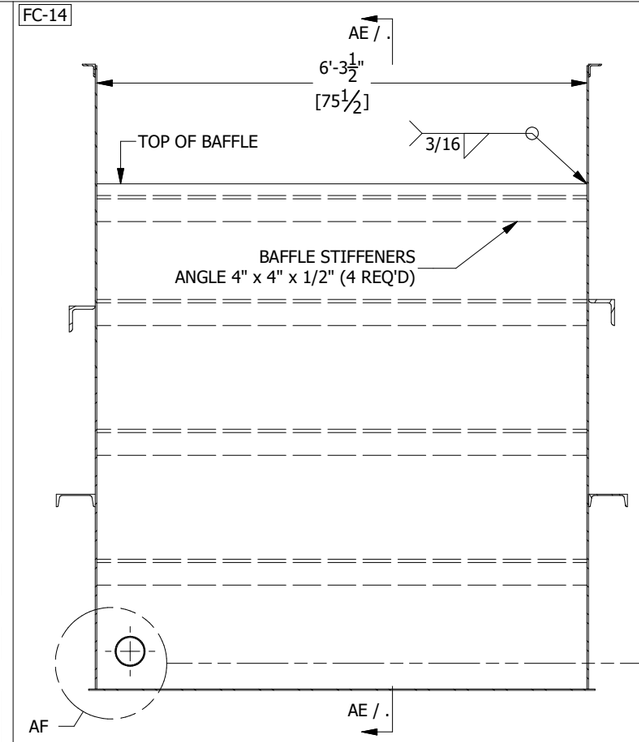

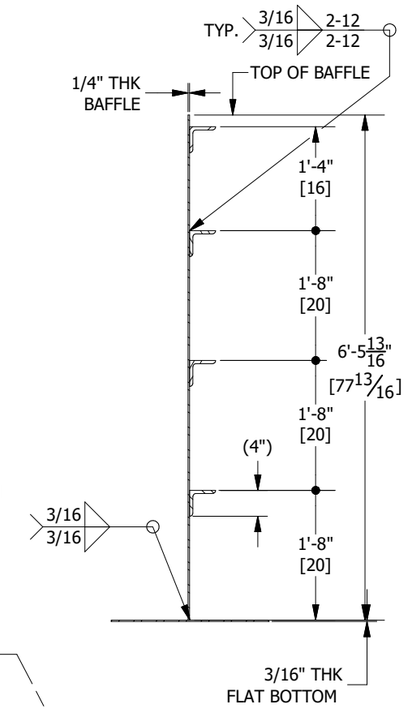

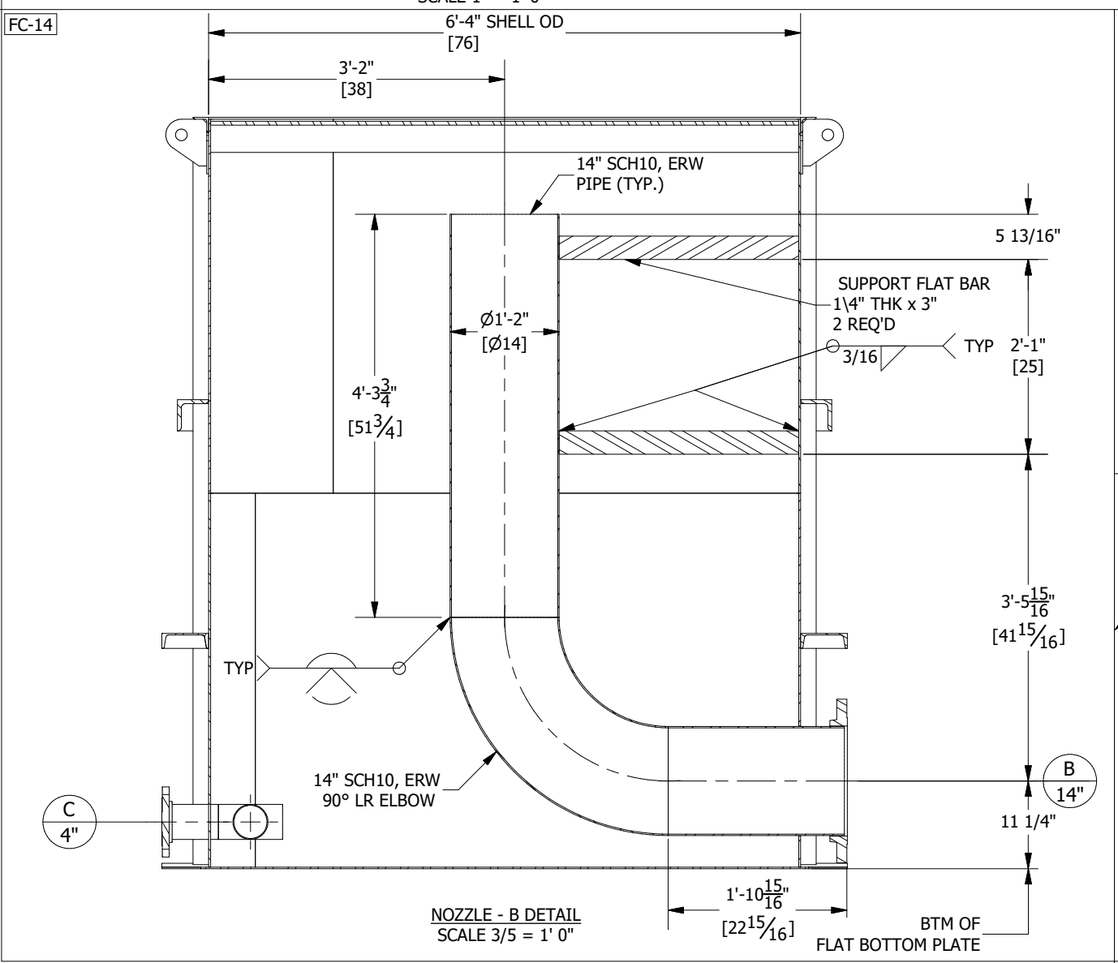

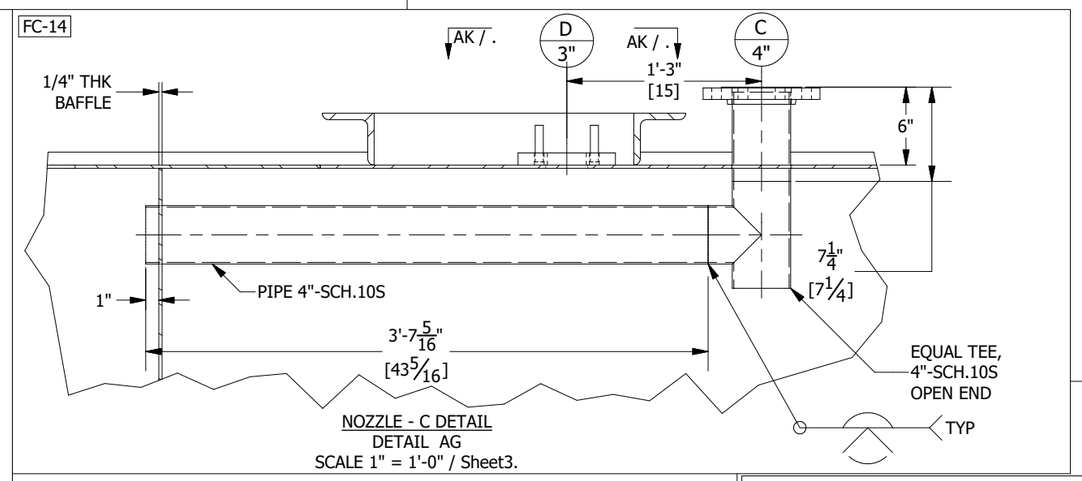

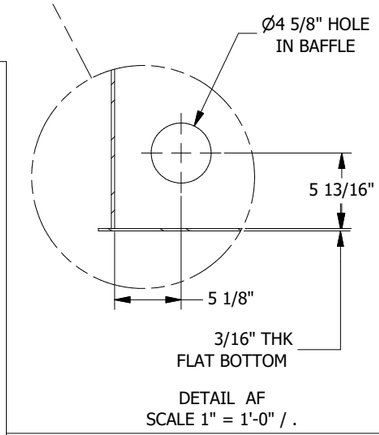

BOLTING FOR SCAB FLANGE:
D: (4) 5/8"-11 NC × 3" FULL THREADED STUDS
(CUT LENGTH AS REQUIRED TO MATCH DRAWING)

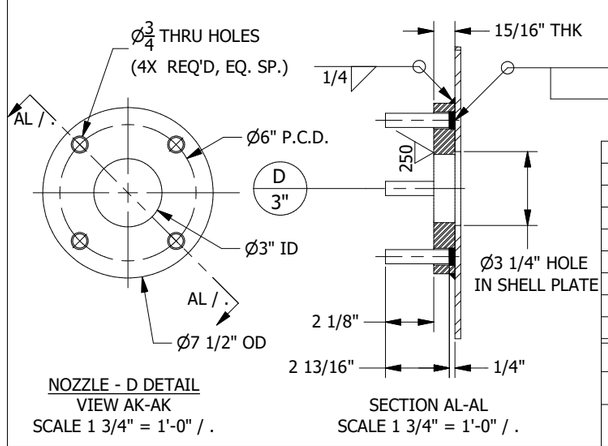

REV	D.BY	C.BY	DATE	DESCRIPTION
2	SS	AD	03-31-26	CERTIFIED
1	SS	AD	02-23-26	APPROVAL REV 1
0	SS	AD	01-23-26	APPROVAL

REVISIONS

Savannah Tank & Equipment Corp.
1517 Telfair Road, Savannah, GA 31415
(912) 233-8902

DRAWN BY: SS
CHK'D BY: AD
APPROVED BY: HP
SCALE: 1/2" = 1' 0"

Sylvamo
Rectangular Seal Tank
EQUIP. 472-5-3584-00A
CUST. PO #S0769C8106

DRAWING NO.: 358-25-4 SHT 4 OF 5 REV. SET 2

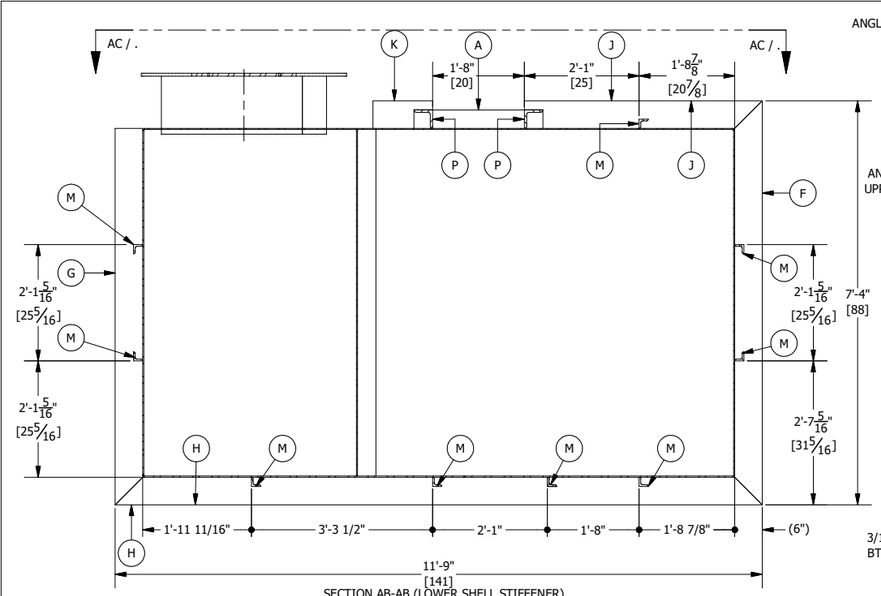

SECTION AB-AB (LOWER SHELL STIFFENER)
SCALE 1/2" = 1' 0" / Sheet2.

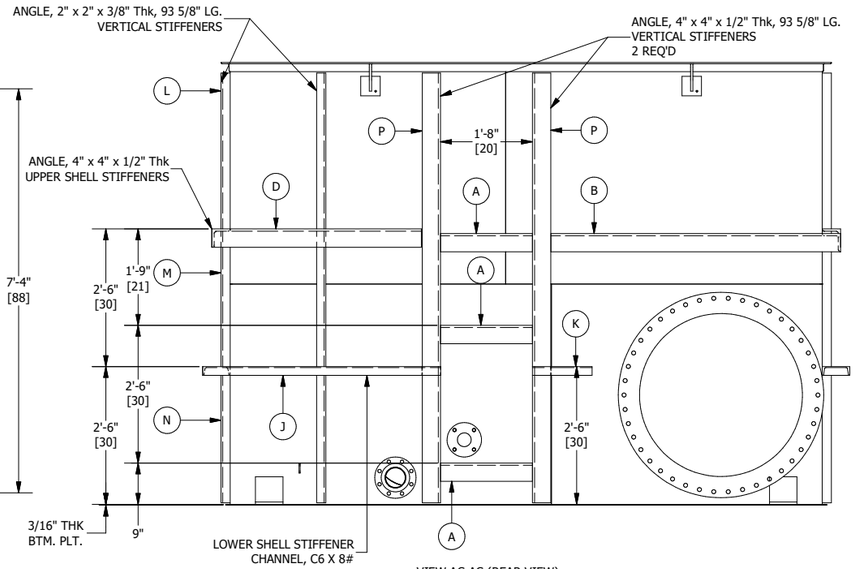

VIEW AC-AC (REAR VIEW)
SCALE 1/2" = 1' 0" / .

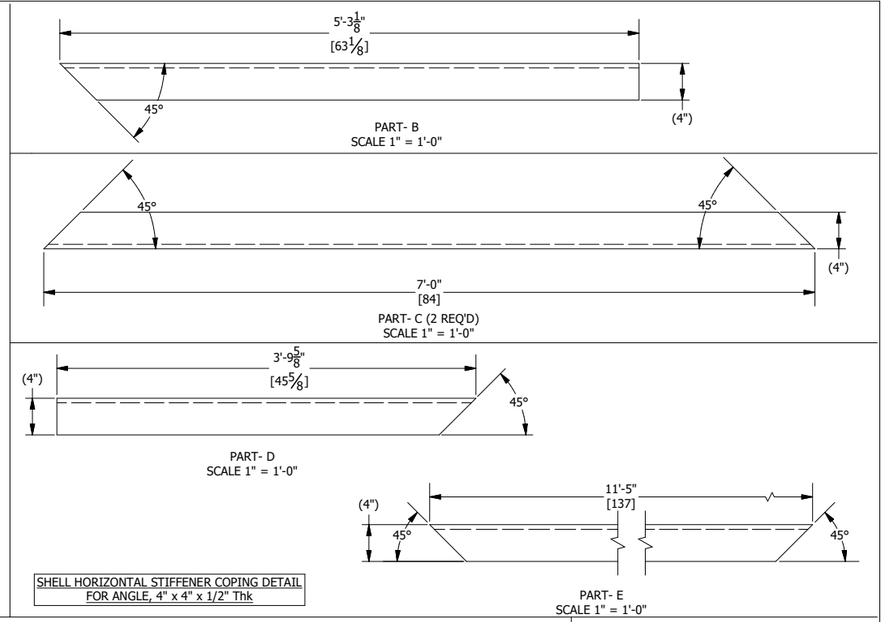

SHELL HORIZONTAL STIFFENER COPING DETAIL
FOR ANGLE, 4" x 4" x 1/2" Thk

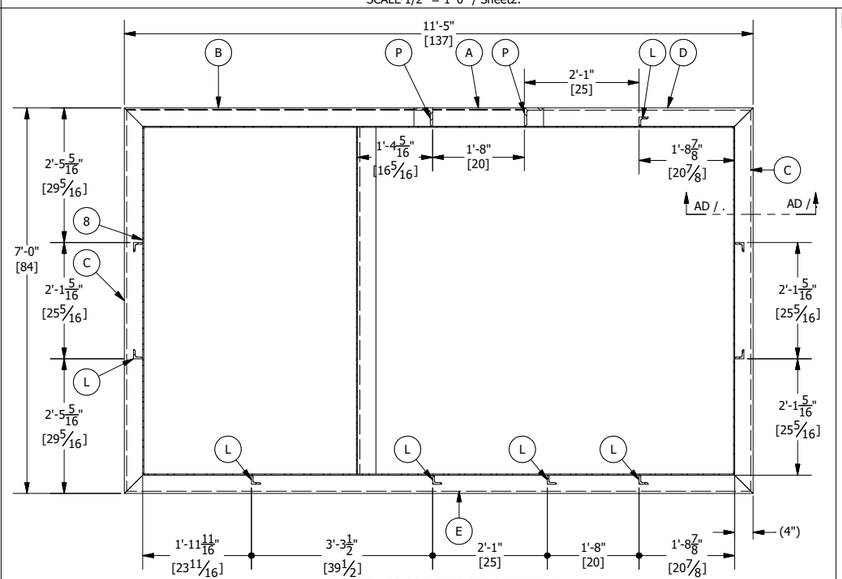

SECTION AA-AA (UPPER SHELL STIFFENER)
SCALE 1/2" = 1' 0" / Sheet2.

FC-14

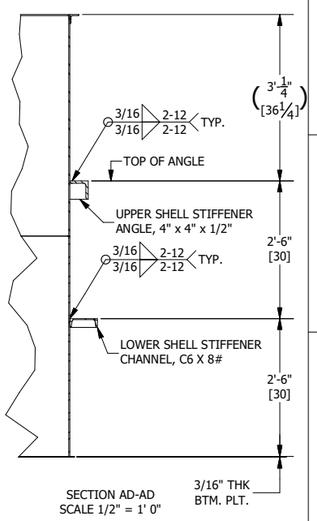

SECTION AD-AD
SCALE 1/2" = 1' 0"

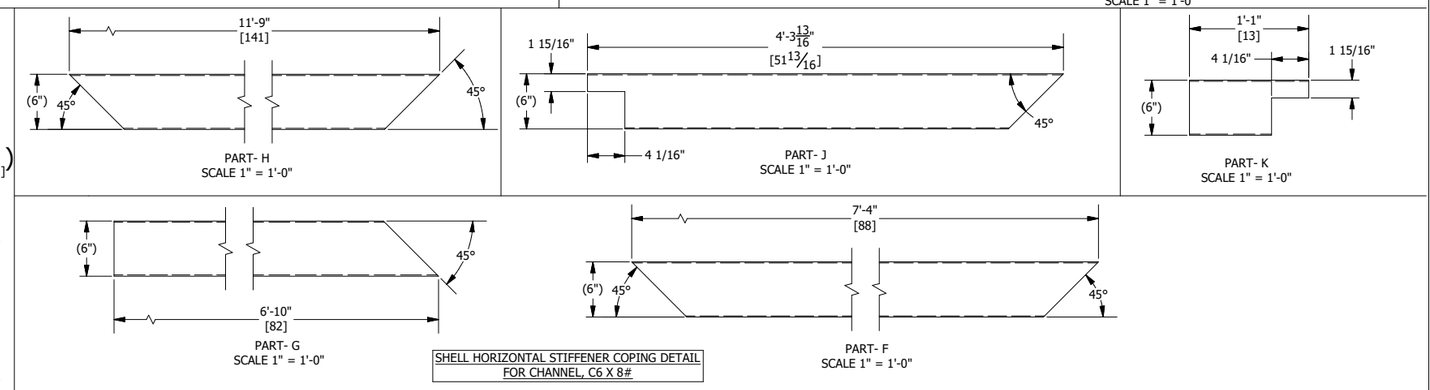

SHELL HORIZONTAL STIFFENER COPING DETAIL
FOR CHANNEL, C6 X 8#

FC-14

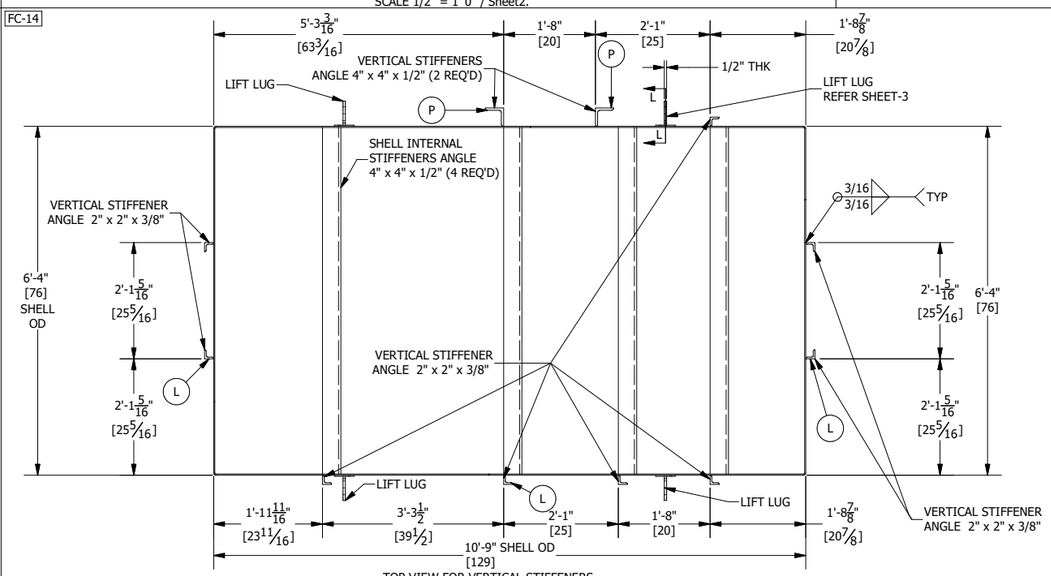

TOP VIEW FOR VERTICAL STIFFENERS
VIEW B-B / Sheet2
SCALE 1/2" = 1' 0"

(RIM ANGLES ARE NOT SHOWN FOR CLARITY.)

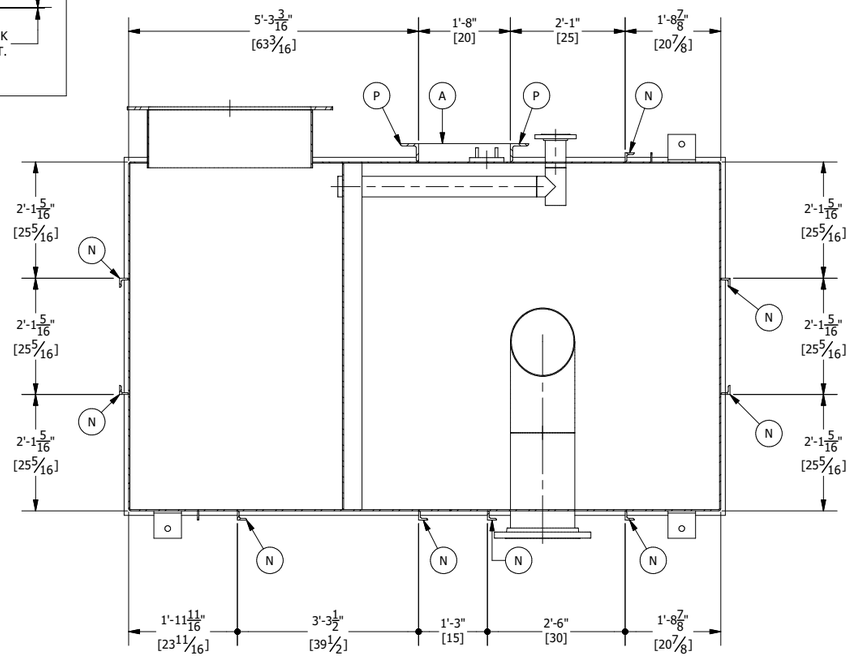

SECTION AJ-AJ
SCALE 1/2" = 1' 0" / Sheet2.

NOTE- ADJUST NOTCH FOR CHANNEL AND ANGLE DURING FABRICATION

SHELL HORIZONTAL STIFFENER COPING DETAIL LIST

SR. NO.	ITEM	QTY	DESCRIPTION
A	SUPPORT ANGLE	3	ANGLE, 4" x 4" x 1/2" Thk, 20" LG.
B	SUPPORT ANGLE	1	ANGLE, 4" x 4" x 1/2" Thk, 63 1/8" LG.
C	SUPPORT ANGLE	2	ANGLE, 4" x 4" x 1/2" Thk, 84" LG.
D	SUPPORT ANGLE	1	ANGLE, 4" x 4" x 1/2" Thk, 45 5/8" LG.
E	SUPPORT ANGLE	1	ANGLE, 4" x 4" x 1/2" Thk, 137" LG.
F	SUPPORT CHANNEL	1	CHANNEL, C6 X 8#, 88" LG.
G	SUPPORT CHANNEL	1	CHANNEL, C6 X 8#, 82" LG.
H	SUPPORT CHANNEL	1	CHANNEL, C6 X 8#, 141" LG.
J	SUPPORT CHANNEL	1	CHANNEL, C6 X 8#, 51 13/16" LG.
K	SUPPORT CHANNEL	1	CHANNEL, C6 X 8#, 13" LG.
L	SUPPORT ANGLE	9	ANGLE, 2" x 2" x 3/8" Thk, 33 15/16" LG.
M	SUPPORT ANGLE	9	ANGLE, 2" x 2" x 3/8" Thk, 29 1/2" LG.
N	SUPPORT ANGLE	9	ANGLE, 2" x 2" x 3/8" Thk, 27 3/4" LG.
P	SUPPORT ANGLE	2	ANGLE, 4" x 4" x 1/2" Thk, 93 5/8" LG.

REV	D.BY	C.BY	DATE	DESCRIPTION
2	SS	AD	03-31-26	CERTIFIED
1	SS	AD	02-23-26	APPROVAL REV 1
0	SS	AD	01-23-26	APPROVAL

REVISIONS

Savannah Tank & Equipment Corp.
1517 Telfair Road, Savannah, GA 31415
(912) 233-8902

DRAWN BY: SS
CHK'D BY: AD
APPROVED BY: HP
SCALE: 1/2" = 1' 0"
DRAWING NO.: 358-25-5 SHT 5 OF 5 REV. SET 2

Sylvamo
Rectangular Seal Tank
EQUIP. 472-5-3584-00A
CUST. PO #S0769C8106